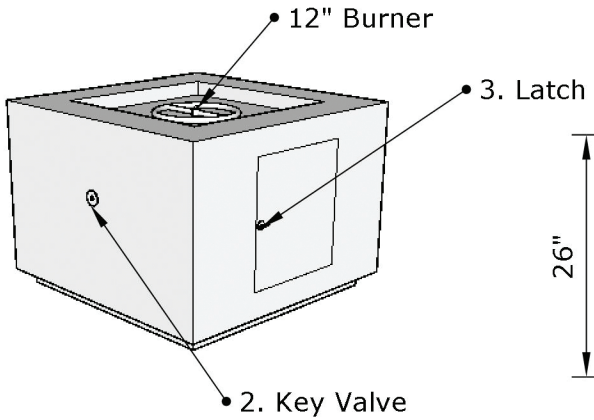

Replacement Part Numbers

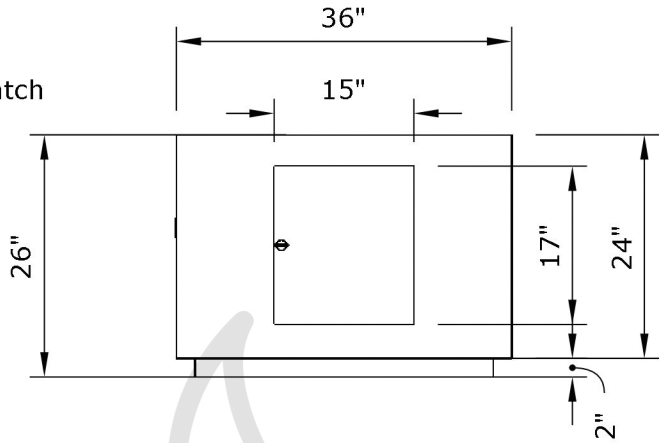

FRONT

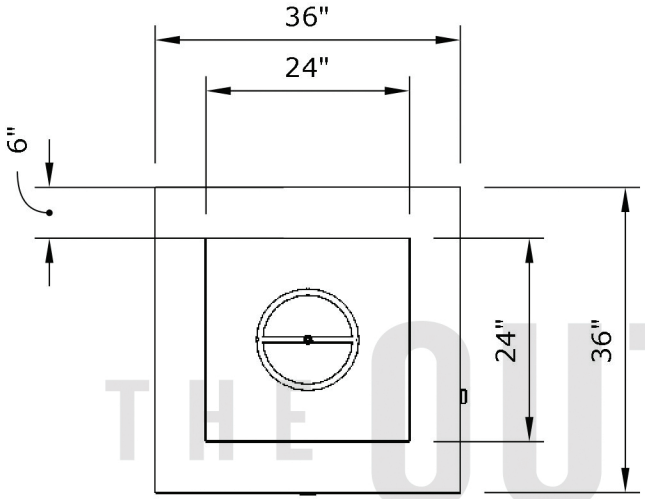

TOP

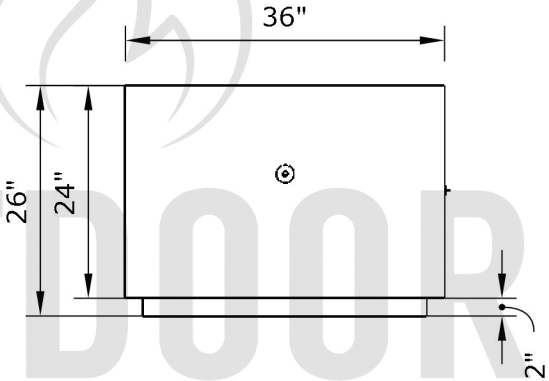

SIDE

THE OUTDOOR PLUS

Forma - 36" Fire Pit

Page Number	1 of 1
Author: Bryant Uribe	4/13/2018
Approved By: Gabriel Estrada	4/13/2018

Part Number	OPT-3636SQCS, OPT3636SQSS
Material	Steel / Stainless Steel
Finishes	Corten Steel, Stainless Steel
Gas Type	Natural Gas (-NG) or Liquid Propane (-LP)
Weight	90 lbs.
BTUs	65,000
Suggested Fire Glass	50 lbs.
Access Door	Yes

ITEM NO.	***REPLACEMENT PART NUMBER***	***QTY.***
1	OPT-159	1
2	OPT-256	1

Proprietary & Confidential: The information contained in this drawing is the sole property of ***The Outdoor Plus***. Any reproduction or as a whole without written permission of ***The Outdoor Plus*** is prohibited.